RAILING CATALOG

Visionary Homes Design

Option 3

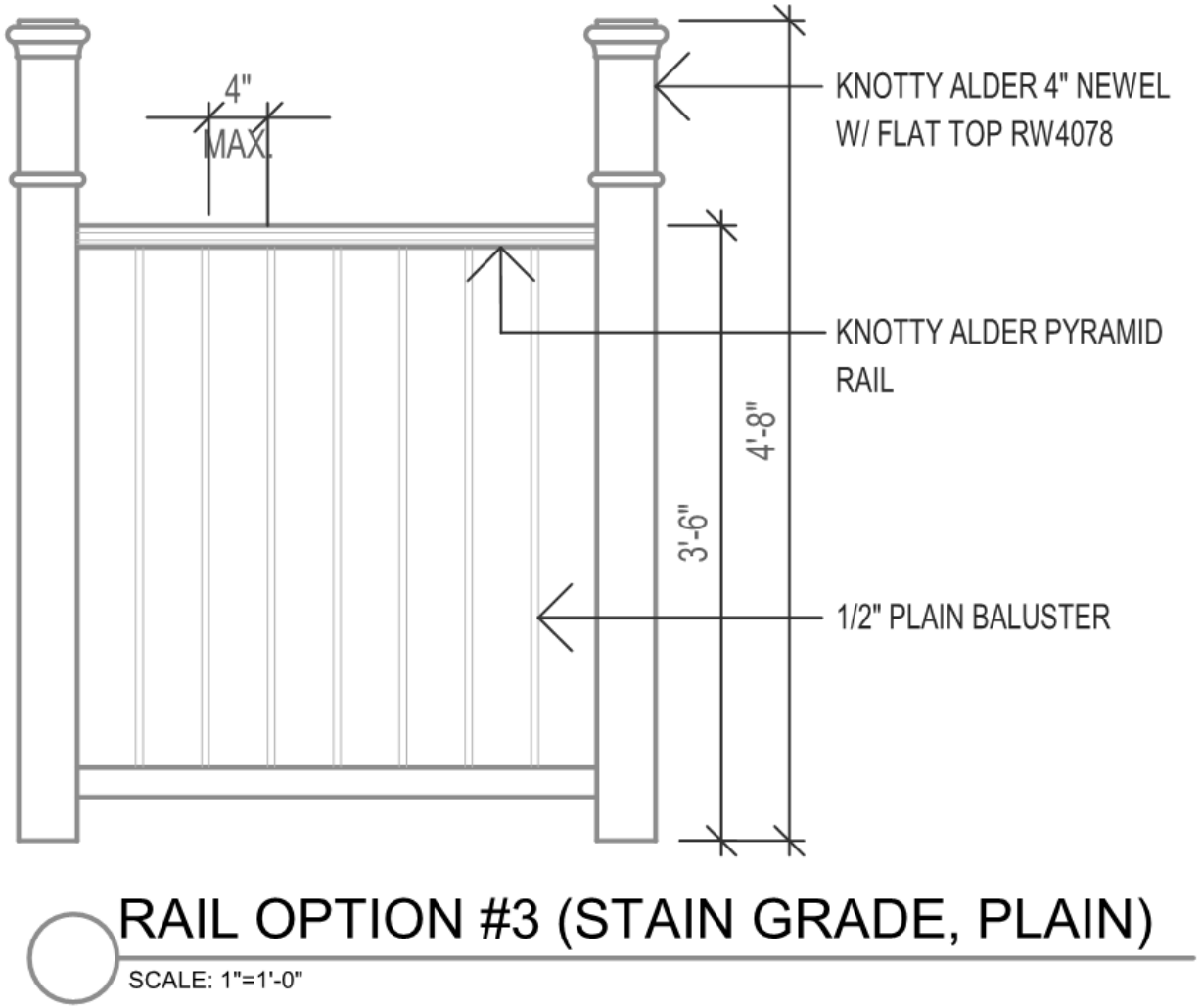
4"
MAX
KNOTTY ALDER 4" NEWEL
W/ FLAT TOP RW4078
KNOTTY ALDER PYRAMID
RAIL
4'-8"
3'-6"
1/2" PLAIN BALUSTER
RAIL OPTION #3 (STAIN GRADE, PLAIN)
SCALE: 1"=1'-0"

Option 4

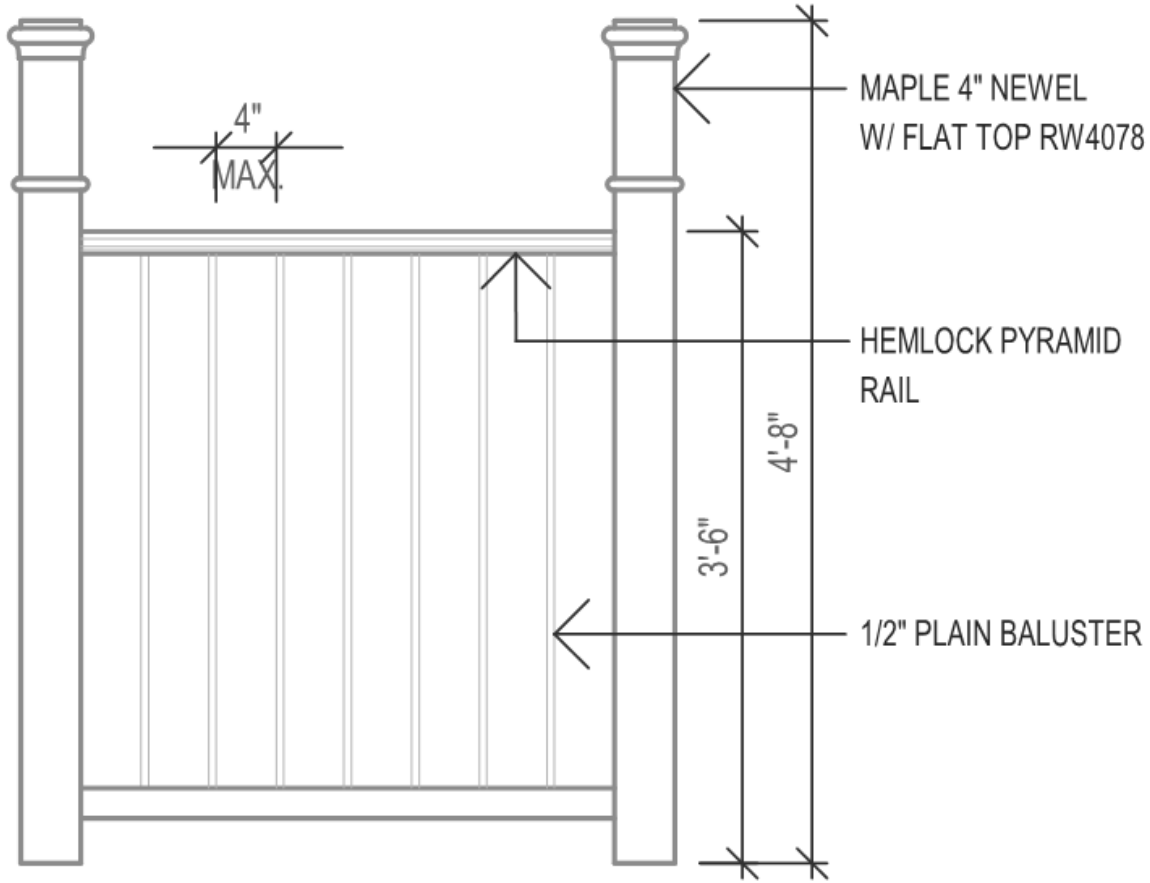

RAIL OPTION #4 (PAINT GRADE, PLAIN)

SCALE: 1"=1'-0"

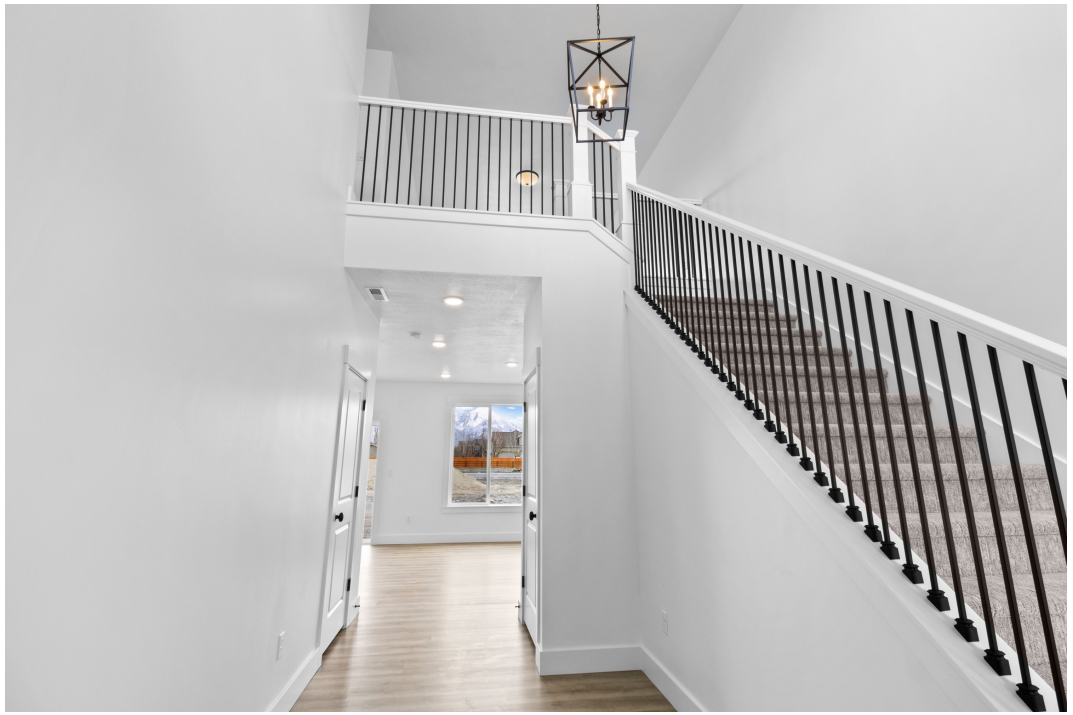

Option 7

RAIL REQUIRES (3) BALUSTERS PER FOOT - USE 36" HIGH BALUSTERS FOR FLAT RUNS
USE 42" HIGH BALUSTERS FOR RAKES, TYPICAL

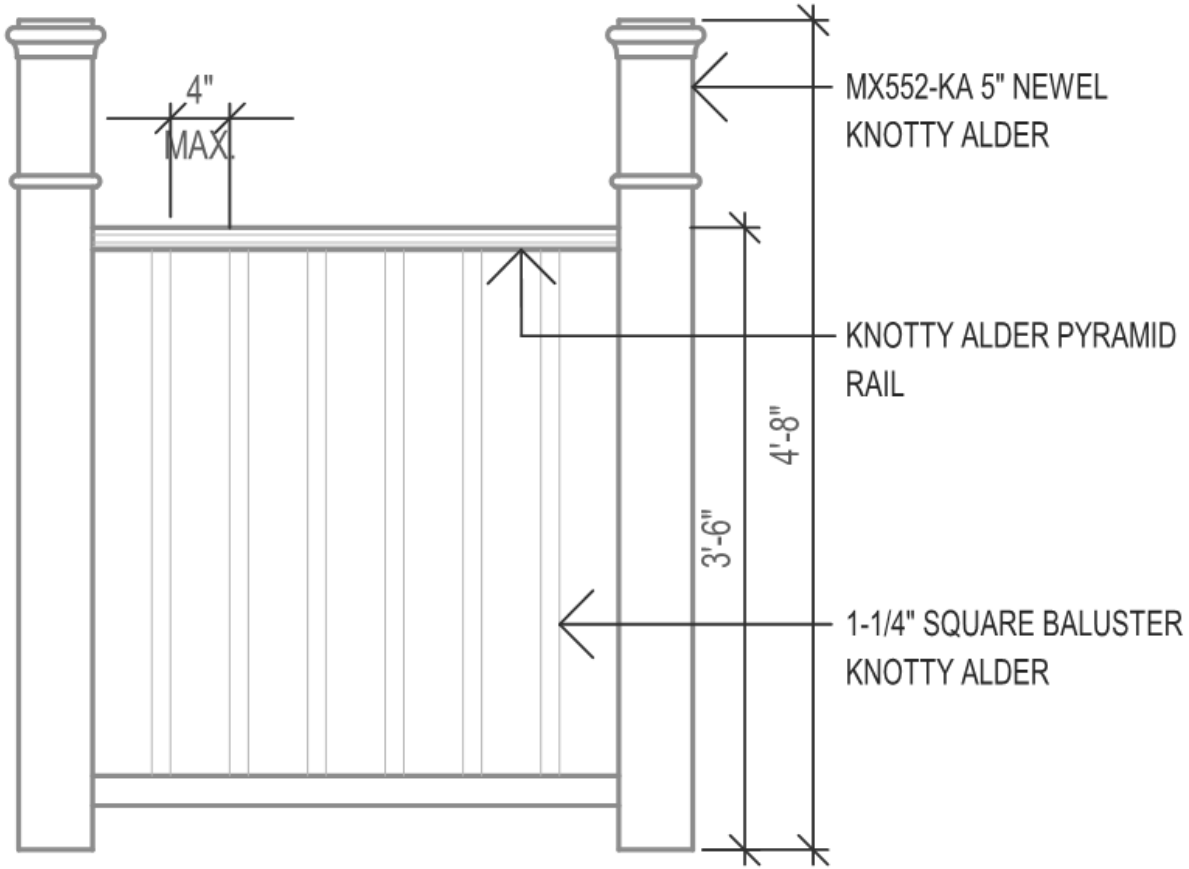

RAIL OPTION #7 (STAIN GRADE, PLAIN)

SCALE: 1"=1'-0"

Option 8

RAIL REQUIRES (3) BALUSTERS PER FOOT - USE 36" HIGH BALUSTERS FOR FLAT RUNS
USE 42" HIGH BALUSTERS FOR RAKES, TYPICAL

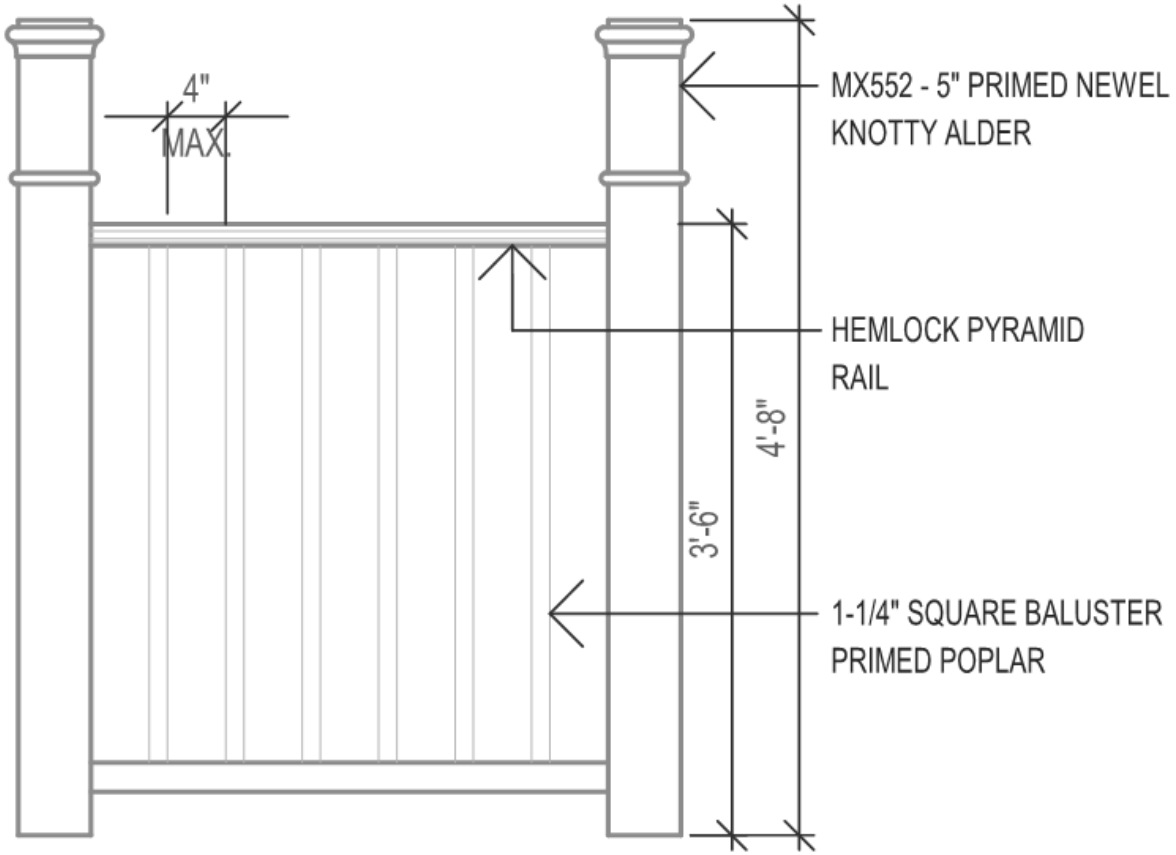

RAIL OPTION #8 (PAINT GRADE, PLAIN)

SCALE: 1"=1'-0"

Option 16

Option 17

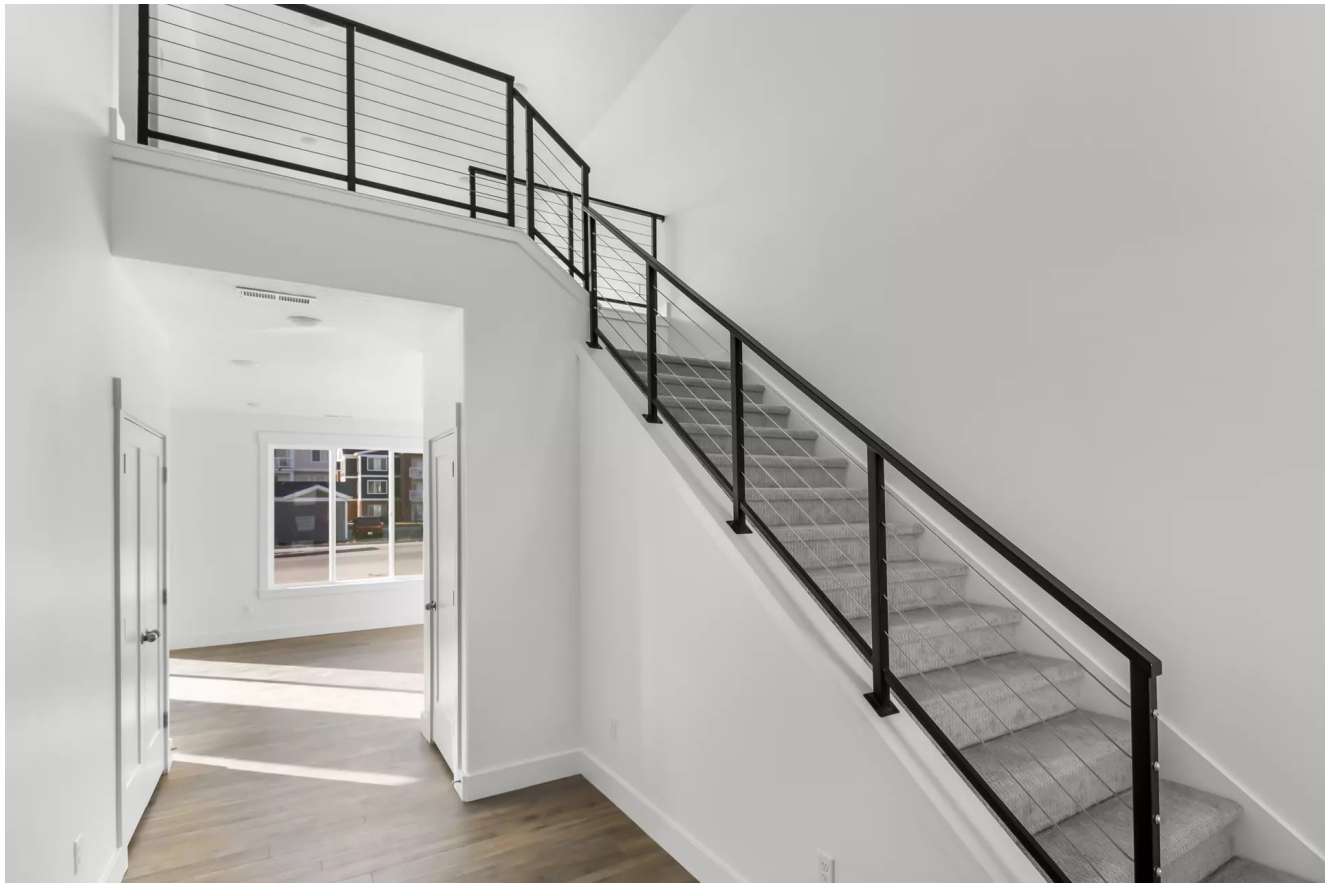

Option 18

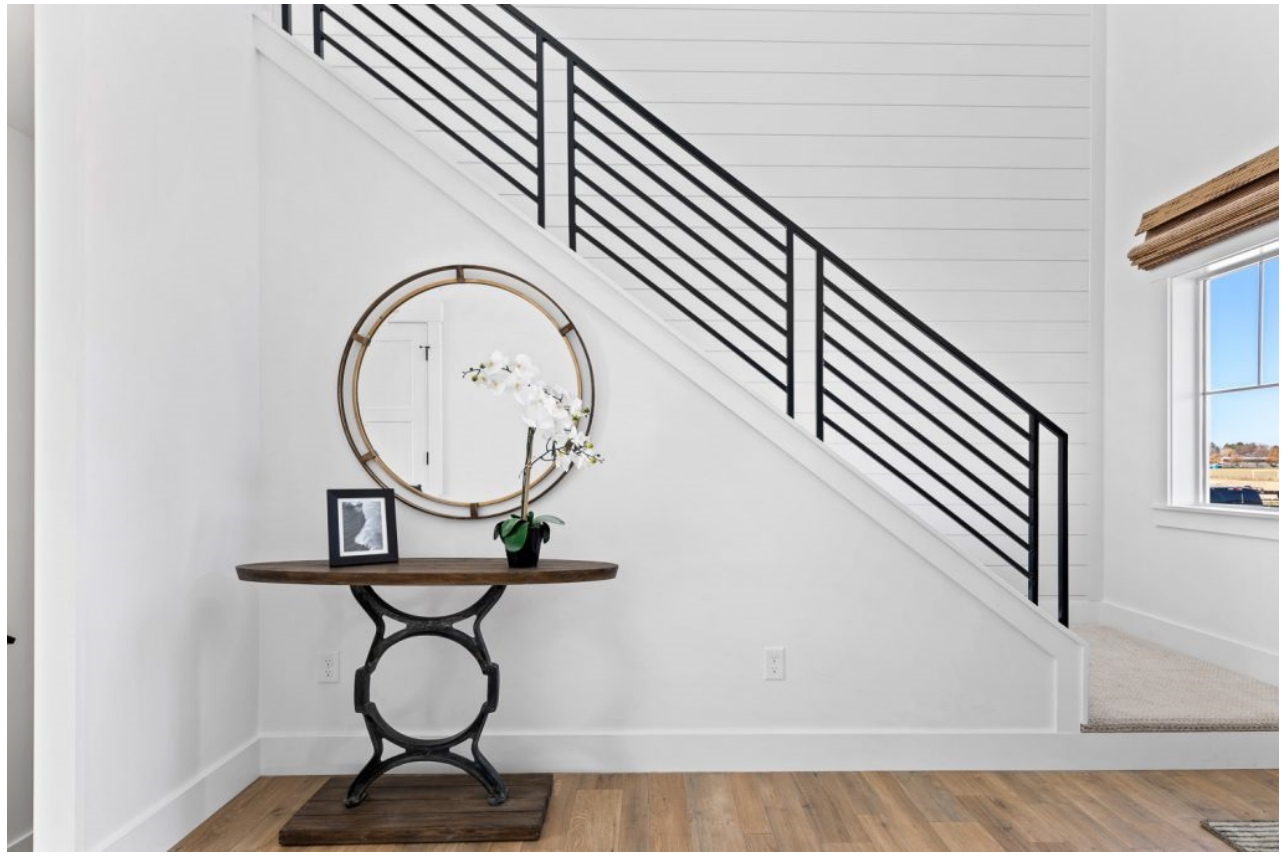

Pony Wall
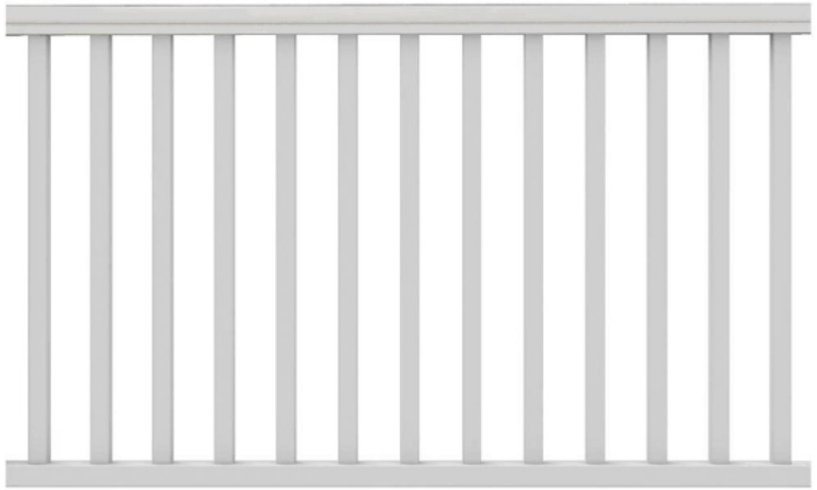
White Vinyl Exterior Railing